UNI-T®

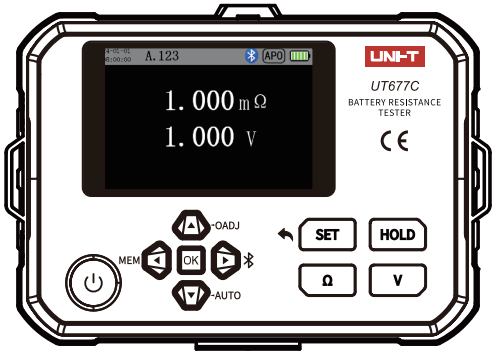

UT677C

User manual

UNI-T®

UNI-TREND TECHNOLOGY（CHINA）CO., LTD.

No. 6, Gong Ye Bei 1st Road,
Songshan Lake National High-Tech Industrial
Development Zone, Dongguan City,
Guangdong Province, China
Tel: (86-769) 8572 3888
http://www.uni-trend.com

Made in China

BATTERY INTERNAL RESISTANCE TESTER

P/N:110401113314X
2025.03.11 REV.0

Table of contents

1. Safety rules and precautions 1
2. Introduction 1
3. Range and accuracy 2
   3.1 Resistance measurement accuracy 2
   3.2 Voltage measurement accuracy 2
4. Technical Specifications 2
5. Instrument structure 4
6. Interface display 4
   6.1 Interface Icons and Symbols 4
7. Measurement principle 5
   7.1 Principle of AC 4-terminal test method 5
   7.2 Voltage Measurement Principle 6
8. Operation method 6
   8.1 Power on/off and automatic shutdown 6
   8.2 Test interface operation 6
   8.3 Setting menu interface operation 7
   8.4 Measurement steps 11
   8.5 Data Storage 11
   8.6 Data access and deletion 12
   8.7 Communicate with PC 13
   8. 8 Communicate with your smartphone or tablet 13
9. Noise frequency avoidance function 13
   9.1 Applicable occasions 13
   9.2 Open/Close 13
   9.3 Single/Cycle Identification of Noise Frequency 14
10. Maintenance and Service 14
   10.1 Batteries 14
   10.2 Repair , inspection and cleaning 15
   10.3 Frequently Asked Questions 16
11. Packing List 16
12. Appendix 16
   Appendix 1 Effects of Eddy Currents 16
   Appendix 2: Effect of Extended Test Leads and Inductive Voltage 17

1. Safety rules and precautions

Thank you for purchasing our company's **universal rechargeable battery internal resistance tester** . Before you use the instrument for the first time, in order to avoid possible electric shock or personal injury , please be sure to: **carefully read and strictly abide by the safety rules and precautions listed in this manual.**

- ✧ Please pay attention to the +/- polarity of the battery and do not install it in reverse.
- ✧ The measured battery voltage should not exceed the upper limit of the instrument.
- ✧ If the meter displays the low battery voltage symbol "▭", it should be charged in time, otherwise it will cause measurement errors.
- ✧ When not in use for a long time, fully charge it every three months to ensure battery health.
- ✧ Do not measure while charging as there will be signal interference.
- ✧ This instrument is designed, manufactured and tested according to IEC61010 safety standards.
- ✧ When measuring, do not use high-frequency signal generators such as mobile phones near the instrument to avoid errors.
- ✧ Pay attention to the labels and symbols on the instrument body.
- ✧ Before use, make sure the instrument and its accessories are in good condition.
- ✧ Do not place or store the instrument for a long time in a hot and humid place, a place with condensation or under direct sunlight.
- ✧ Pay attention to the measuring range and operating environment specified for this instrument.
- ✧ The use, disassembly, calibration and maintenance of this instrument must be performed by authorized personnel.
- ✧ If continued use of the instrument is dangerous due to the instrument's condition, stop using it immediately and seal it up immediately.Handled by an authorized agency.
- ✧ The "⚠" safety warning signs in the instrument and manual indicate that users must strictly follow the contents of this manual.Perform safe operations.
- ✧ In any case, special attention should be paid to safety when using this instrument.

2. Introduction

The universal rechargeable battery internal resistance tester is referred to as **The battery internal resistance tester**. It is a measuring instrument used to measure the internal resistance and voltage of rechargeable batteries such as lead-acid batteries and lithium batteries to determine the health status of the battery. It can also be used as an instrument to measure the ESR parameters of electrolytic capacitors (for reference only). This instrument uses the AC 4-terminal test method to measure the internal resistance of the battery. It can measure the correct measurement value without being affected by the contact resistance between the test line, terminals and battery electrodes. It also has functions such as data storage, data review, alarm, and automatic shutdown. The whole machine is high-end and beautiful, with a wide range, high resolution, convenient operation, easy to carry, accurate, reliable, stable performance, and strong anti-interference ability. It is an indispensable instrument for battery production, battery installation, equipment production, equipment maintenance and other scenarios.

The universal rechargeable battery internal resistance tester is controlled by a microprocessor, and the internal 16-bit A DC can accurately detect the battery internal resistance and voltage. Its features are that it can measure without stopping the UPS system, using AC low resistance measurement and noise reduction technology, and it does not need to stop the normal operation of the device under test. It can measure in the running state, which greatly shortens the

test time. It also has the functions of data storage, bar graph display, data upload to computers, mobile phones, tablets and other smart devices through Bluetooth connection for wireless measurement, data access, etc.

3. Range and accuracy

Accuracy guarantee conditions	Accuracy guaranteed temperature and humidity range: 23 ° C ±5 °C, 80 % RH or less Warm-up time: No need
Temperature characteristics	The operating temperature range plus the test accuracy of ×0.1/ ℃ (outside 18 ℃~ 28 ℃)
Excitation signal accuracy	Measuring current accuracy: ±25% Normal mode: 1000Hz ± 5Hz Noise avoidance frequency mode: 920Hz ~ 1080Hz automatic frequency conversion (Use multi-stage noise reduction technology to effectively filter out noise interference of different frequencies or nearly the same frequencies)

3.1 Resistance measurement accuracy

Range	Maximum display	Resolution	Test accuracy	Measuring current
3 mΩ	3.100 mΩ	1 uΩ	±1 % fs . ±20 dgt.	200 mA
30 mΩ	31.00 mΩ	10 uΩ	±0.5 % fs . ±15 dgt.	200 mA
300 mΩ	310.0 mΩ	100 uΩ		20 mA
3 Ω	3.100 Ω	1 mΩ		2 mA

3.2 Voltage measurement accuracy

Range	Maximum display	Resolution	Test accuracy
7 V	± 7.100 V	1 m V	± 0.2 % fs . ± 10dgt .
100V	± 99.99 V	10mV	
120V	±122 . 0 V	100mV	

Hint:

The above accuracy guarantee is only limited to the factory standard test lead. When using non-standard test leads or extension leads, this accuracy table is also applicable after zero adjustment.

4. Technical Specifications

Function	Battery internal resistance measurement, battery voltage measurement
Avoid noise frequency	Yes, automatic frequency conversion range 920Hz~1080Hz
Accuracy guaranteed temperature and	23℃±5℃, below 75%rh

humidity	
Charging adapter	Input: 100-240V AC/50Hz/60Hz Output: 0.8A/12.6V DC
Battery	DC 11.1V Lithium Battery 2600mAh
Resistance resolution	1 uΩ
Voltage resolution	1 mV
Measuring range	Internal resistance measurement: 0.000mΩ~3.000Ω (4 ranges)
	Voltage measurement: 0.000V~±120.0V (3 ranges)
Maximum input voltage	DC 120V (between + and - terminals) AC input is not allowed
Measurement method	Internal resistance measurement: 1kHz AC 4-terminal test method, open circuit terminal voltage 3 V max Measuring current: 2.0mA ~ 200mA (different measuring currents for different ranges) A/D conversion method: Successive approximation type Display update frequency: 5 times per second
Response time	2 00m s
Measure time	About 2 seconds
LCD Size	73.4mm×48.9mm / 3.5 inches (480 * 320 resolution 1 6 -bit true color screen)
Instrument size	Length, width and height: 170 mm × 115 mm × 65 mm
Type-C interface	With Type-C interface, the stored data can be uploaded to the computer, saved and printed
Bluetooth connection	Have
Hold and store functions	Manual hold and storage, automatic hold and storage
Measurement judgment function	Preset pass, warning, and fail thresholds
Power display	The battery level is displayed in 5 bars, and it reminds you to charge in time when the battery voltage is low
Automatic shut-down	If the device is powered on and no operation is performed, it will automatically shut down after 15 minutes by default (you can change the time or turn it off in the settings)
Power consumption	150 mA MIN / 250 mA MAX
Quality	Instrument weight: 674.0g (including battery)
Working temperature and humidity	-10℃～40℃; below 80%RH
Storage temperature and humidity	-20℃～60℃; below 70%RH
Insulation resistance	20MΩ or more (500V between circuit and housing)

Pressure resistance	AC 3700V/RMS (between circuit and housing)
External magnetic field	＜40A/m
External electric field	＜1V/m
Suitable for safety regulations	IEC 61010

5. Instrument structure

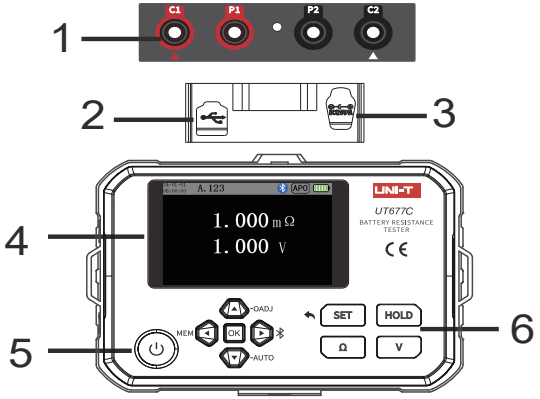

1. **Connection port**
2. **TYPE-C**
3. **Charging port**
4. **Screen**
5. **Power switch and power light**
6. **Buttons**

6. Interface display

6.1 Interface Icons and Symbols

	Indicates the remaining power and charging status of the instrument battery
APO	Indicates that the automatic shutdown function is currently turned on for the instrument
	Indicates that the Bluetooth data is turned on for the current instrument, and is turned off by default when powered on
AHOLD	Indicates that the instrument has automatically saved data
HOLD	Indicates that the instrument has manually saved data
A.21	Indicates that the current storage is A, and there are 21 groups of data in storage A
FULL	If a single storage is full and 500 groups are stored and measurement is continued, the screen will display "FULL" and no more data will be stored.
FAIL	Indicates that the current measurement result is judged as failed

WARNING	Indicates that the current measurement result is judged as a warning
PASS	Indicates that the current measurement result is judged as passed
OADJ	Indicates that the initial line resistance has been subtracted from the current measurement result
FREQ	The flashing symbol indicates that the frequency is changing and the interference frequency is being identified.
SF	**Normal mode:** Indicates that the software filtering function has been turned on. The digital changes are slower than in normal mode and are turned off by default. **NOICE mode:** indicates that the rolling mode is turned on, that is, the interference frequency is identified cyclically and the interference frequency test is avoided. If it is not turned on, the interference frequency is only identified for the first time, and then the interference frequency test is avoided all the time. It is turned off by default when the power is turned on.
NOISE	Indicates that the current mode is to avoid interference
Auto	Indicates that the instrument has turned on the automatic shift function, which is turned on by default when the instrument is turned on.
	Indicates that the current measured voltage has exceeded the human safety voltage, please pay attention to safety

7. Measurement principle

7.1 Principle of AC 4-terminal test method

An AC current I with a frequency of 1kHz flows between the positive and negative electrodes of the battery, and the AC voltage difference V between the positive and negative electrodes of the battery is measured. The internal resistance of the battery is calculated according to the formula **R=V/I**. To ensure the measurement accuracy, the two current electrodes (C) and the two voltage electrodes (P) should contact the positive and negative electrodes of the battery independently, so as to obtain the correct measurement value without being affected by the wire resistance or contact resistance.

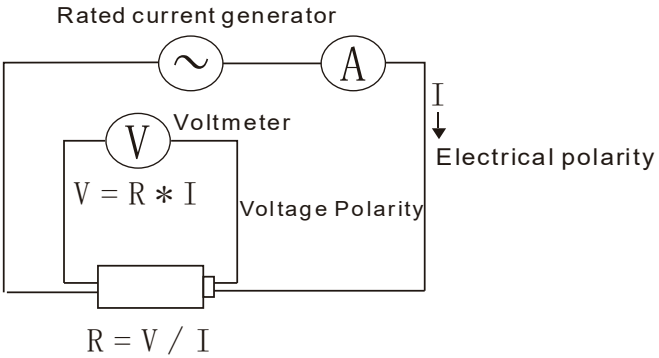

7.2 Voltage Measurement Principle

After sampling the resistor voltage division and filtering out the noise, ADC sampling is performed and the measured value is obtained through program calculation and correction.

8. Operation method

8.1 Power on/off and automatic shutdown

● Long press ⏻ Realize power on and off.

● The automatic shutdown function is turned on. If no key is pressed after the power is turned on , the meter will automatically shut down when the set time is reached to save power. If any key is pressed during this period, the shutdown time will be recalculated. This function can be turned off in the settings or the automatic shutdown time can be changed. The factory default is 15 minutes to shut down. When turned on, the status bar displays APO icon .

8.2 Test interface operation

In the test interface, you can view the current instrument time, measurement value and instrument status information. The functions of the operation buttons are as follows:

Key Symbols	Short press	Long Press
HOLD	Data hold	
SET	Enter the settings menu	
Ω	Resistance measurement shift	
V	Voltage measurement shift	Display voltage (+ press OK to reset)
▲	Zero or cancel zero	
▼	Turn automatic shifting on or off (No storage when power off)	
◀	Enter data reading mode	Delete the latest cached data in HOLD mode

▶	Turn Bluetooth on or off	
OK	Enable or disable software filtering	NOICE/Normal mode switch

8.3 Setting menu interface operation

On the test interface, press SET Enter the setting directory interface, where you can select the items to be set and view the basic information of the instrument . The menu interface includes 1:Language setting, 2: Threshold setting, 3: Alarm setting, 4: Storage setting, 5: Shift mode, 6: Clock setting, 7: Energy saving setting, and 8: About the instrument .

Operation flow example: first press to SET enter the menu interface (make sure to press in the test interface SET) -> press ▲ / ▼ Move cursor to select (1: Language setting, 2: Threshold setting, 3: Alarm setting, 4: Storage setting, 5: Shift mode, 6: Clock setting, 7: Energy saving setting, 8: Instrument options) -> Press OK to enter the option where the cursor is. You can cancel the setting by pressing SET return.

The key functions of this interface are as follows:

Key Symbols	Short Press
▲ ▼	Select the item you want to set
OK	Enter into
SET	Return

1） Language settings

The language setting is used to change the displayed language and supports Simplified Chinese and English.

Set the process instance: First enter the interface (1 (language setting) of the menu interface) -> press ▲ / ▼ Switch the cursor to select the setting option (Simplified Chinese)/(English) -> By pressing OK The changes can be saved and the user can return to the menu.SET return.

key functions of this interface are as follows:

Key Symbols	Short press
▲ ▼	Select Settings
OK	Save and return
SET	Return

2） Threshold settings

The threshold setting interface can set the thresholds for judging the test results as pass, warning, and fail. Setting appropriate thresholds can improve the judgment efficiency and test efficiency. The resistance threshold setting range is 0-3000 mΩ, and the voltage setting range is 0-120.0V. The set table thresholds are resistance: pass, fail , warning thresholds, and voltage: warning, pass thresholds.

To set a process instance : First, enter this interface (2 (threshold setting) in the menu interface) -> press ◁ / ▷ to switch the setting item to be set (Resistance: Pass , Warning and Fail Thresholds / Voltage: Warning, Pass Thresholds) -> By pressing OK Enter the required setting item -> By pressing ◁ / ▷ You can choose to set the threshold in thousands, hundreds, tens, or units ->By pressing △ / ▽ Implementing addition and subtraction of values -> By pressing OK Save the threshold and return to the previous interface -> By pressing SET You can save and return to the menu interface. You can cancel the setting by pressing SET return.

The key functions of this interface are as follows:

Key Symbols	Short press
◁ ▷	Toggle Settings
OK	Enter or exit the current setting item
◁ ▷	Digital displacement
△ ▽	Add or subtract values
SET	Save and Return/Return

3） Alarm settings

The alarm setting interface can be used to set the buzzer prompt mode when the test is completed. The optional alarm types are 1: pass (ON(open) / OFF (closed)), 2: warning / failure (ON (open) / OFF (closed)).

Set the process instance: First enter this interface (3 (Alarm Settings) in the menu interface -> press △ / ▽ To switch the cursor to select the alarm function options((Pass)/(Warning/Failure) -> (Pass) By pressing OK Switch (ON/OFF） -> (Warning/Failure)) by pressing OK Switch (ON/OFF) -> By pressing SET You can save and return to the menu interface. You can cancel the setting by pressing SET return.

The key functions of this interface are as follows:

Key Symbols	Short press
△ ▽	Switch alarm function
OK	Change settings
SET	Save and Return / Return

4） Storage Settings

The storage setting interface can set the hold, storage mode, and storage selection. There are ten memories A BCDEFGHIJ to choose from. If the current storage has stored 500 sets of data, it will prompt that the storage is full (**FULL** symbol) when storing data. You need to manually set other memories or delete the current storage data before storing new measurement data. There are three functions that can be set, 1: automatic hold (ON (open) / OFF (closed)), 2: hold storage (ON (open) / OFF (closed)), 3: current

storage (you can choose any one of A BCDEFGHIJ).

Set up the process instance:

Auto hold: First enter this interface (4 (Storage Settings) on the menu interface) -> Press ▲ / ▼ To switch the cursor to auto-hold option -> By pressing OK Can switch Automatic hold status (ON/OFF -> By pressing SET Can be saved and Return to the menu interface.

Hold storage: First enter this interface (4 (Storage Settings) of the menu interface) -> press ▲ / ▼ To switch the cursor to the option to hold the storage-> by pressing OK Can switch hold the storage status (ON/OFF -> by pressing SET Can be saved and Return to the menu interface.

Current storage: First enter this interface (4 (Storage Settings) of the menu interface) -> press ▲ / ▼ To switch the cursor to the current storage option -> press OK to display the storage number -> press ◀ / ▶ Change the cursor to select storage (for example:the number in the lower right corner indicates how many groups of data are cached in the current storage, and a total of 10 memories can be switched:ABCDEFGHIJ) - > By pressing OK Select the storage indicated by the cursor as the current storage and return to the previous interface -> By pressing SET Can be saved And return to the menu interface.Cancel the setting by pressing SET return.

The key functions of this interface are as follows:

Key Symbols	Short press
▲ ▼	Select Settings
OK	Change settings or select storage
◀ ▶	Select Other storage
SET	Save and Return / Return

5） Shift mode

The shift mode setting interface allows you to select manual shift or automatic shift measurement mode.

Test interface display Auto The icon indicates that the machine has turned on the automatic shift function.

Set the process instance: First enter this interface (5 (shift mode) of the menu interface) -> press ▲ / ▼ Toggle cursor to select setting option (Automatic shift) /(Manual shift) -> By pressing OK Save and return to the menu interface. To cancel the setting , SET press return.

The key functions of this interface are as follows:

Key Symbols	Short press
▲ ▼	Toggle setting item selection status
OK	Save and return

SET	Return

6） Clock Settings

The clock setting interface can be used to set the instrument time. The time display format of this instrument is XX (year)-XX (month)-XX (day) XX (hour): X X (minute): X X (second). You can also connect the computer or mobile phone to synchronize the instrument time with one click through our company's supporting software.

Set the process instance : First enter this interface (6 (Clock Setting) of the menu interface) -> press / / / You can select year, month, day, hour, minute, second (the cursor indicates the current selection) -> By pressing OK , You can enter the value modification interface of the current selection (year, month, day, hour, minute, second) -> By pressing / You can select the tens or ones -> by pressing / You can modify the value of the tens or ones digit -> By pressing OK, You can save the current setting value (not effective at this time) and return to the previous interface -> By pressing HOLD The current setting time can be effective (you can set the year, month, day, hour, minute, and second HOLD according to your needs , and then press It is also possible) Display (effective) indicates that the setting is successful -> By pressing SET You can return to the menu interface. You can cancel the setting by pressing SET return.

The key functions of this interface are as follows:

Key Symbols	Short press
	Select the item you want to set
OK	Set selection items
	Change the value of the selected value
	Select other values
HOLD	The current setting time takes effect
SET	Return

7） Energy saving settings

The energy saving setting interface can set the instrument display brightness or turn the instrument's automatic shutdown function on or off.
Show APO The icon indicates that the machine has turned on the automatic shutdown function.

Setting process instance: First enter this interface (7 (Energy saving settings) of the menu interface) -> press / Switch the cursor to select the setting option (Backlight)/(Auto Power Off) -> (Backlight) by pressing / Change backlight

brightness -> (Auto Power Off) by pressing ◁ / ▷ Set the automatic shutdown time (5, 15, 30 minutes or off) -> By pressing SET You can save and return to the menu interface. You can cancel the setting by pressing SET return .

The key functions of this interface are as follows:

Key Symbols	Short press
△ ▽	Select Settings
◁ ▷	Change backlight brightness or auto-off time
SET	Save and Return / Return

8） About the instrument

On this page, you can view the basic information of the current instrument. Press SET You can return to the settings menu interface.

8.4 Measurement steps

Internal resistance measurement:

1) Connect the test line to the instrument, and connect the indicator mark (small arrow) of the test line to the indicator mark (small arrow) on the instrument according to the color.

2) Set the instrument parameters, refer to 8.3.1 and 8.3.2 .

3) If you use a test lead other than the standard one, short-circuit the four-wire clamps of the test lead and press △ Key zero calibration.

4) Clip the test leads to the battery electrodes and the instrument starts testing.

5) Wait for the value to stabilize and then read the test result.

Voltage measurement:

This meter can also be used as a DC voltmeter. Just connect the two red and black interfaces in the middle to measure the DC voltage. Be careful not to measure AC voltage or DC voltage exceeding 120V.

(When the resistance displays “-----”, the voltage must be greater than 0.1V to display the value, otherwise only the “-----” symbol will be displayed) .

(When there is residual voltage or measurement deviation after short-circuiting the test leads V+ V-, you can manually adjust the voltage to zero. The operation method is to first short-circuit the test leads V+ V-, then long-press the “**V**”key, then press the “**OK** ”key, and when you hear a beep from the buzzer, the zero adjustment is complete).

8.5 Data Storage

The data storage function requires the "Hold storage" function to be turned on in the settings (please refer to Section 8.3), which is turned on by default at the factory. Each time a manual HOLD or automatic HOLD is performed, a set of data will be automatically numbered and stored.

This instrument has 10 data storage devices, numbered A~ J can be selected in the settings, and all storage devices can store 5,000 data records when they are full .

It should be noted that when a storage is full of 500 groups and continues to measure, the HOLD data is no longer saved in the storage. The user needs to manually switch to another storage or delete the data in the storage before saving.

Storage number	Can store records/items
A	500
B	500
C	500
D	500
E	500
F	500
G	500
H	500
I	500
J	500

8.6 Data access and deletion

On the test page, press ◀ Press the key to enter the Reader Selection interface. You can operate the instrument according to the page prompts to select the reader and enter the bar graph interface. In the Reader Selection interface, press ▲ key to delete the current reader data. You can choose whether to delete according to the prompt.

As shown in Figure 8-1, the bar graph interface can display 10 measurement records per page, which can intuitively analyze the internal resistance of batch batteries.◀ key or ▶ The key moves the reading cursor left and right. The item selected by the cursor can read the specific information of battery internal resistance, voltage and test time.▲ key or ▼ By pressing SET Can be returned.

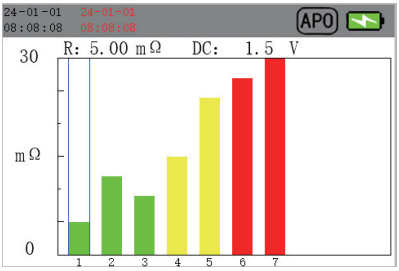

Figure 8-1 Data reading interface

8.7 Communicate with PC

Before use, please confirm:

1. The USB driver has been installed.
2. The computer has the host computer software and EXCEL software installed.

Use the included USB Type-C communication cable to connect the meter and the computer. After opening the software, it will automatically search for the COM port and connect automatically. You may need to wait for a few seconds to more than ten seconds. After the connection is successful, you can realize functions such as reading real-time measurement values, reading historical measurement records, and synchronizing computer time to the meter.

8. 8 Communicate with your smartphone or tablet

Please confirm before use:

1. The system version of your mobile phone or tablet is Android 5.0 or above.
2. The "Battery Internal Resistance Tester" APP is installed in the smart device.

In the measurement interface of the instrument, press Turn on the Bluetooth function on the smartphone and open the APP. Search for "BRT " (Battery Resistance Tester) and connect. After the connection is successful, wireless measurement and data browsing functions can be realized.

9. Noise frequency avoidance function

9.1 Applicable occasions

Generally, when measuring the battery of a UPS or battery uninterruptible power supply, the noise frequency of 1000Hz or near 1000Hz generated by the load overlaps with the measurement frequency of this unit, resulting in unstable measurement. This function can be turned on to automatically avoid the noise frequency.

9.2 Open/Close

In normal mode, long press the button OK to turn it on, and long press it again to exit.

After turning on, NOISE the icon displayed indicates that the current mode is to avoid noise frequency. FREQ Flashing means that the frequency is being changed and the interference frequency is being identified. FREQ Stopping flashing and disappearing means that the noise frequency has been avoided and the internal resistance is being tested. The progress of a complete test is indicated by the red progress bar at the bottom of the screen.

(The longest time for one round of measurement: 1.5s*3*18+1=82s. The longest time for one round of measurement is about 82 seconds. This is when there is no interference) .

(The fastest time for one round of measurement: 1.5s*2+1=4s. The shortest time for one round of measurement is about 4 seconds. This is when the interference is very close to 1000Hz) .

Tip: This mode takes a long time to test. If you are sure there is no noise frequency, please do not use this function.

After completing a measurement, there are 4 frequency test displays below the icon, in order:

1. The difference between the first round output frequency and the noise frequency.
2. The difference between the second round output frequency and the noise frequency.
3. The estimated noise frequency.
4. The frequency of this test.

Sometimes, due to the specific situation of the noise, it may not be possible to avoid all noise frequencies. When the noise frequency identification fails, the above 1/2/3 items will display Fail, and the progress bar will turn yellow. At this time, you can press and hold key or Use the key to manually select the measurement frequency and choose a relatively stable value as the result.

9.3 Single/Cycle Identification of Noise Frequency

After turning on the noise avoidance frequency mode, short press OK the key to turn on or off the rolling measurement, that is, cyclically identify the interference frequency and avoid the interference frequency test . The icon will be displayed after turning it on; if it is not turned on, it will only identify the interference frequency for the first time, and then avoid the interference frequency test all the time. It is turned off by default.

10. Maintenance and Service

10.1 Battery Charging

This product has a built-in rechargeable lithium battery pack (11.1V,2600mAh), please use the special lithium battery charger (12.6V,0.8A) that comes with the product standard to charge. (Figure 10-1)

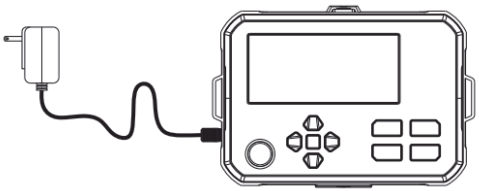

Figure 10-1 Charging diagram

When charging, when the product is turned on, the power indicator will turn into a breathing lamp state (it is always on without charging). The charging symbol " " will also appear in the upper right corner of the screen. When the battery is fully charged, the battery status symbol“ ”in the upper right corner of the screen changes to Full charge.

The mapping between the battery charge identifier and the battery voltage is as follows:

Symbol	Battery voltage

	9.6~10.1V
	10.1~10.6V
	10.6~11.1V
	11.1~11.6V
	11.6~12.1V
	>12.1V

Note: When charging in the off state, the power lamp has no prompt, and there is no charging information on the screen. If the battery is full, please turn on and observe the battery power information on the screen.

1) When the battery voltage is lower than 9.6V, the battery symbol "" flashes to indicate that the battery is low. After one minute, the battery will be forcibly shut down to protect the battery. Please charge the battery in time to ensure the measurement accuracy.
2) Charging from Charge to About 5 hours.
3) When the battery is fully charged, it can be used continuously for 4 to 8 hours . The screen brightness and power consumption under different loads are also different. Assuming that the 3Ω range is always used and the screen brightness is adjusted to the lowest , the maximum usage time is about 8 hours due to the minimum output current.
4) If the screen flashes and then goes black when the device is turned on, the battery may not be sufficient to turn it on. Please fully charge the device before starting measurement.
5) The battery life of a new meter is about 500 charge and discharge cycles. When the battery is no longer durable, contact the meter dealer for a replacement. Do not replace it by yourself.

10.2 Repair , inspection and cleaning

⚠ warn

Please do not modify, disassemble or repair the product. This may cause fire, electric shock or personal injury. If you disassemble or modify the product yourself, you will be deemed to have waived the one-year free warranty service.

1) Correction

The calibration cycle varies depending on the customer's usage conditions and environment. We recommend that you determine the calibration cycle based on the customer's usage conditions and environment and entrust us to perform calibration regularly.

2) Clean

To remove dirt from the instrument, use a soft cloth dampened with a small amount of water or neutral detergent and wipe it gently. Use a dry soft cloth to gently wipe the display area.
Please do not use gasoline, alcohol, acetone, ether, ketone, thinners and detergents containing gasoline. Otherwise, it will cause the instrument to deform or discolor.

3) Transportation

To avoid secondary damage caused by impact during transportation, please be sure to double pack. We do not guarantee damage caused by transportation.
When returning the instrument for repair, please write down the fault details, return address, contact person, telephone number and other necessary information on a piece of paper and

attach it to the instrument and send it back to us.

10.3 Frequently Asked Questions

Question	Answer
Why is the instrument time inaccurate?	The internal clock system is powered by the instrument battery, not the button battery, so the clock system needs to be fully charged to work properly. It should be charged every 3 months when not in use for a long time.
“----- ” always appear during measurement ?	Please check whether the test line is well connected and whether the interface is plugged in to the bottom. Generally, "- ---- " will be displayed only when the circuit is not connected.
What does it mean when it says O L ?	The measurement is out of range.
What battery capacity (Ah) can have its internal resistance and voltage measured?	This instrument uses AC signal for measurement, and DC current will not flow into this instrument. Therefore, there is no limit on the capacity (Ah) of the battery being tested.

11. Packing List

Name	Specification	Quantity
Meter	UT677C battery internal resistance	1 set
Test line	Double-ended clip line length: 1.5 meters Crown line length: 1.5 meters	1 set of clip line Crown line 1 set
Communication line	USB Type-C Cable length: 1 meter	1
Charging adapter	Input: 100-240V AC/50Hz/60Hz Output: 0.8A/12.6V DC	1
Battery	DC 11.1V Lithium Battery 2600mAh	1 (installed in the machine)
Manual	Instructions in English	1 set
Toolbox	*	1

12. Appendix

Appendix 1 Effects of Eddy Currents

The AC current generated by this instrument induces eddy currents in nearby metal plates. This eddy current induces an induced voltage in the test line.

Since the induced voltage has a phase angle of 180 degrees different from the AC current (reference signal) , it cannot be eliminated by synchronous detection, resulting in measurement errors.

The influence of eddy current is a phenomenon unique to resistance meters that perform AC measurements. To avoid this influence, do not place a metal plate near the test lead (where it branches into two), and avoid getting close to a metal plate.

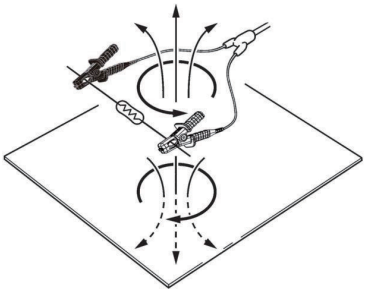

Appendix 2: Effect of Extended Test Leads and Inductive Voltage

The quality and s

adjustment at the 3 mΩ range, the measured value will fluctuate by about 20dgt. due to the

说明书菲林做货要求：

序号	项目	内容
1	尺寸	143x210mm±1mm
2	材质	封面封底128g铜版纸+内页60g书写纸做货
3	颜色	1：1印刷，单黑
4	外观要求	印刷完整清晰、版面整洁，无分层、残损、毛边等缺陷。
5	装订方式	钉装
6	排版	
7	表面处理	无
8	其它	REV.1　修改尺寸与材质

DWH 设 计	卢群2025/03/11	MODEL 机型: UT677C	Part NO. 物料编号:110401113414X
CHK 审 核		UNI-T®	优利德科技(中国)股份有限公司 UNI-TREND TECHNOLOGY (CHINA) CO., LTD.
APPRO. 批 准			